The Genetics of Hearing Loss in the Palestinian Population

Hereditary Research Laboratory

Why Hearing Loss?

Hereditary Research Laboratory

Hearing Loss in the Palestinian Population*

Gender	Population	Affected Individuals	Percentage
Females	1,495,055	2,410	0.16
Males	1,524,649	2,885	0.18

•Does not include those parts of Jerusalem annexed by Israel in 1967.

Palestinian Central Bureau of Statistics, 1999. Population, Housing and Establishment Census 1997, Statistical Brief. (Summary of Census Results) Ramallah –Palestine.

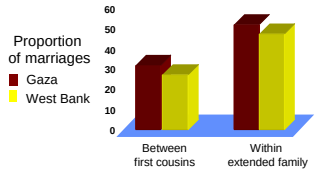

Hearing loss affecting the Palestinians is severe to profound bilateral congenital sensorineural in nature

Sample audiogram of an affected individual from Family K

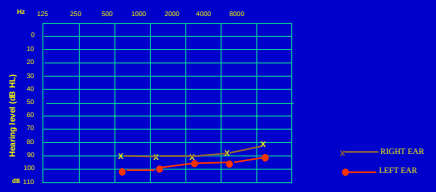

Classification of Hearing Loss

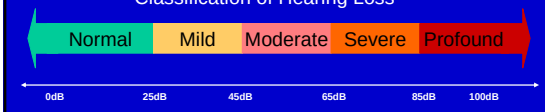

Hereditary Research Laboratory

- **There is no policy yet that addresses hearing loss as a public health threat.**
  - Limited number of specialized schools for the deaf
  - Education is limited to up to the age of 16
  - Chances for rehabilitation are minimum and limited to vocational training
  - Lack of database
- **The HRL is interested in the basic science that addresses relevant problems and ties it to the new advancement in the field of genetics**

The Inner Ear

Hereditary Research Laboratory

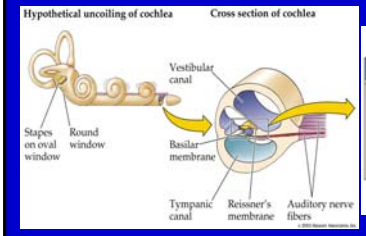

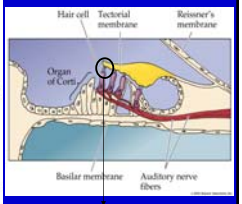

Top view of hair cell, showing stereocilia projecting from top of hair cell.

Hair Cells – Function

Hereditary Research Laboratory

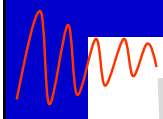

Hair cell

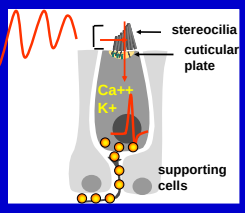

Hair bundle

Auditory/Vestibular stimulus →
Stereocilia deflection →
Opening of ion channels & entrance of Ca^{++} and K^{+} ions →
Hair cell depolarization →
Neurotransmitter release at synapse

Classification of Deafness

Hereditary Research Laboratory

Deafness

- ~50% — Environmental
  - Ototoxic drugs
  - Acoustic trauma
  - Bacterial infections
  - Viral infections
- ~50% — Genetic
  - ~30% — Syndromic
    - Alport, Norrie, Pendred, Usher, Waardenburg, Branchio-Oto-Renal, Jervell and Lange- Nielsen
  - ~70% — Non-syndromic
    - ~22% Autosomal Dominant (DFNA1- DFNA40)
    - ~77% Autosomal Recessive (DFNB1- DFNB33)
    - ~1% X-Linked (DFN1- DFN8)
    - <1% Mitochondrial

Resendes et al. 2001

Hereditary Research Laboratory

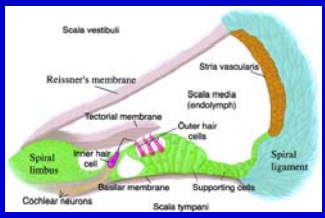

Loci Associated with Nonsyndromic Hearing Loss

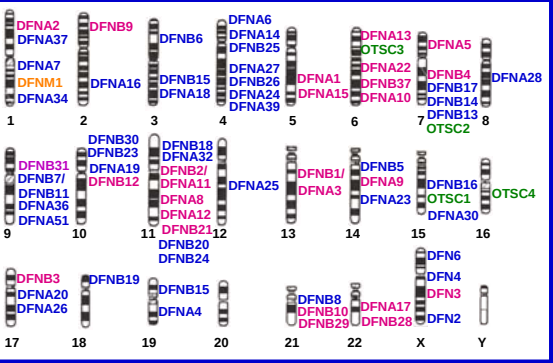

DFN = deafness, DFNA = autosomal dominant, DFNB = autosomal recessive, OTSC = otosclerosis, DFNM modifier, DFN = X-linked

Genes for Hearing Loss in Middle Eastern Families in our Project

Connexin 26	Pendrin
☆ POU4F3	Cadherin 23
☆ MYO3A	MYO15A
TMPRSS3	☆ TRIOBP
Otoancorin	Pejvakin

Others still unknown

Expression of connexin 26 in the cochlea

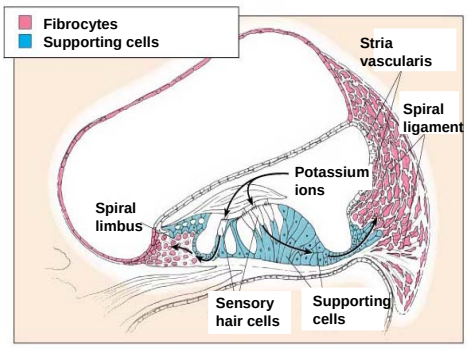

Family S - *GJB2*.167ΔT

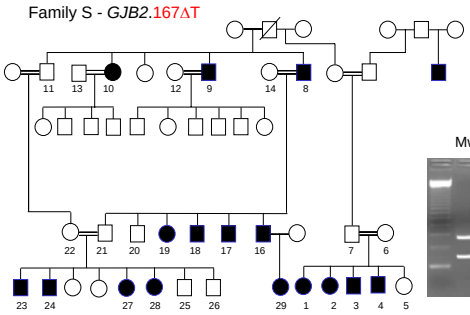

MwoI digest

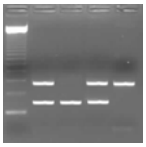

- GJB2 mutations in 17 of 156 (11%) HHI Palestinian families
- 5 different mutations: 167ΔT, 35ΔG, IVS1(+1)G>A, 233ΔC, Trp77Arg

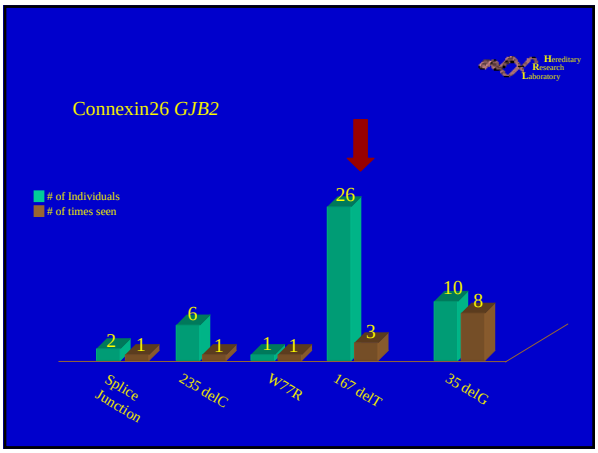
Hereditary Research Laboratory
Connexin26 GJB2
# of Individuals
# of times seen
2
1
6
1
1
1
26
3
10
8
Splice Junction
235 delC
W77R
167 delT
35 delG

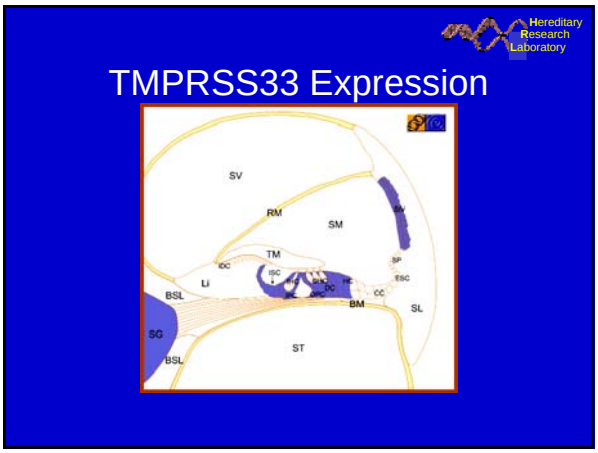
Hereditary Research Laboratory
TMPRSS33 Expression
SV
RM
SM
TM
Li
BSL
SG
ST
BM
SL

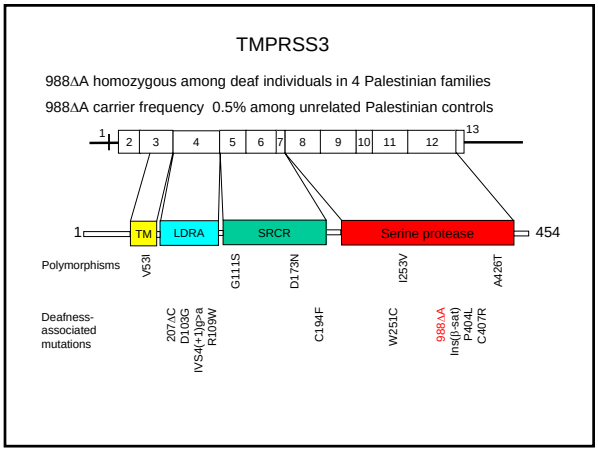
TMPRSS3
988ΔA homozygous among deaf individuals in 4 Palestinian families
988ΔA carrier frequency 0.5% among unrelated Palestinian controls
1
2
3
4
5
6
7
8
9
10
11
12
13
TM
LDRA
SRCR
Serine protease
454
Polymorphisms
V53I
G111S
D173N
I253V
A426T
Deafness-associated mutations
207ΔC
D103G
IVS4(+1)g>a
R109W
C194F
W251C
988ΔA
Ins(I)-sat)
P404L
C407R

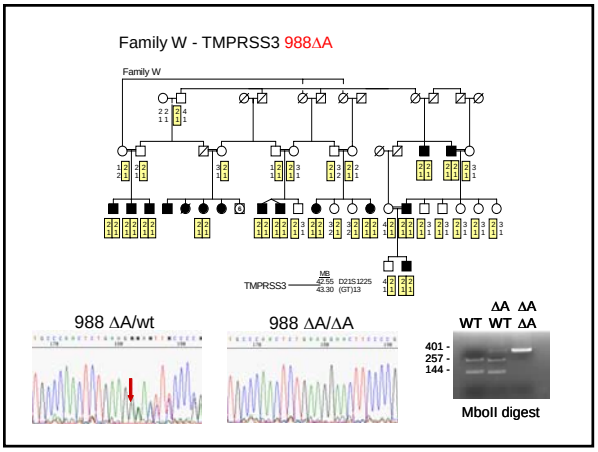
Family W - TMPRSS3 988ΔA
Family W
TMPRSS3
988 ΔA/wt
988 ΔA/ΔA
WT
ΔA WT
ΔA ΔA
401 -
257 -
144 -
MboII digest

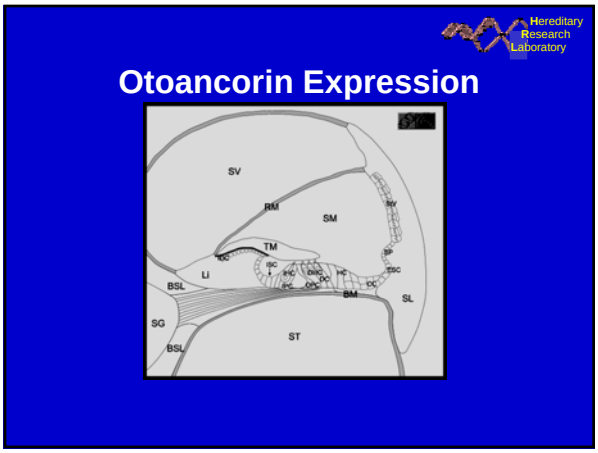
Hereditary Research Laboratory
Otoancorin Expression
SV
RM
SM
TM
Li
BSL
SG
ST
BM
SL

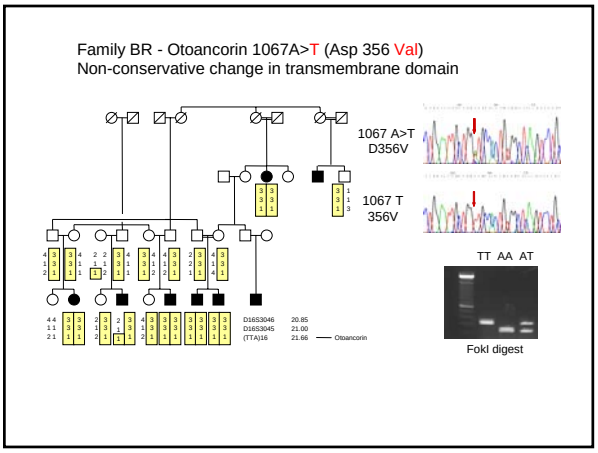
Family BR - Otoancorin 1067A>T (Asp 356 Val)
Non-conservative change in transmembrane domain
1067 A>T
D356V
1067 T
356V
TT AA AT
FokI digest

Hereditary Research Laboratory

SLC26A4 Expression

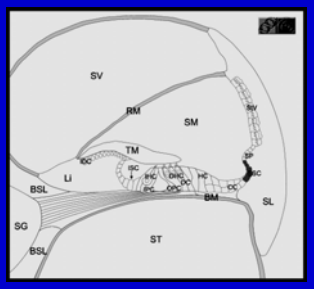

Family Y - Pendrin 716T>A (Val 239 Asp)

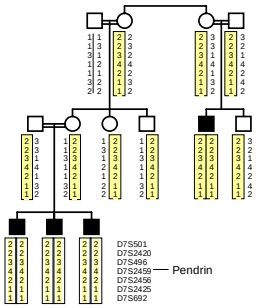

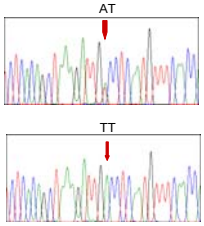

BsmfI digest

Enlarged Vestibular Aqueduct by CT scan in Family Y

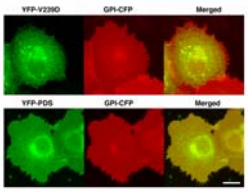

Co- localization of wild type versus 716T>A Pendrin

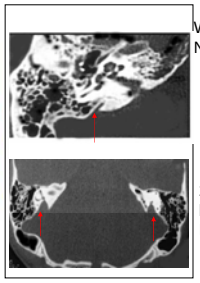

Wildtype
Normal hearing

239 Asp homozygote
Hearing loss

Family BF - Pendrin 1001 G>T

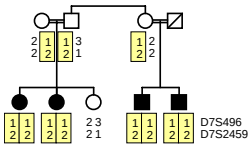

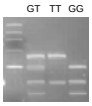

Hph1 digest

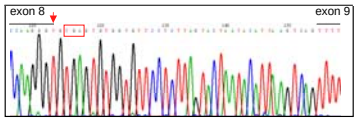

1001 G>T = ins 41 into mRNA = 346 stop

Palestinian Family AB
Prelingual nonsyndromic hearing loss

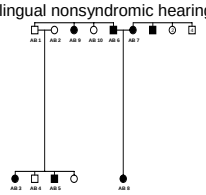

Palestinian Family AB
Homozygosity of AB 3, 4, 6, 9

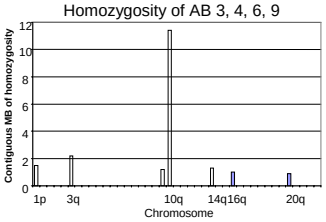

Cadherin 23 is a component of the tip link in hair-cell stereocilia

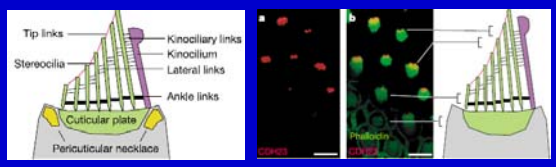

Siemens et al. 2004 NATURE, VOL 428

Palestinian Family AB

Cadherin 23.2065 C>T (exon 15) = Pro 559 Ser
Cadherin 23.3571 G>A (exon 26) = Glu 1061 Lys

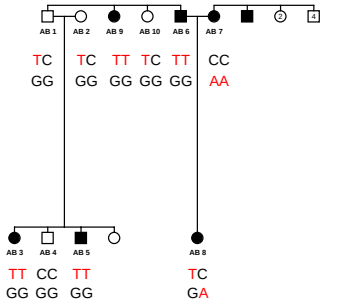

Family Z

Cadherin 23.8293 G>T (exon 25) = Val 2635 Phe

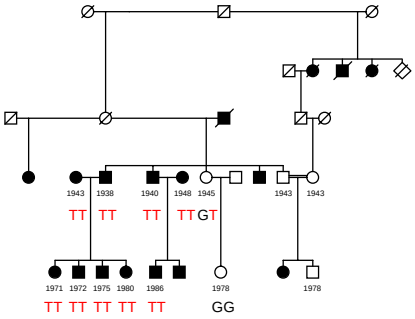

Cadherin 23 mutations in Families AB and Z

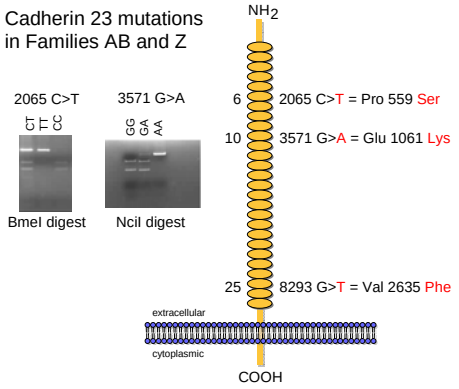

CDH23 Pro559Ser

CDH23 Glu1061Lys

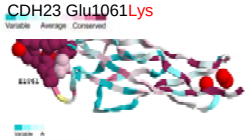

CDH23 Val2635Phe

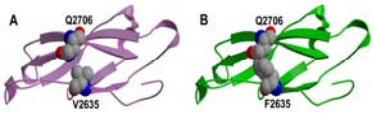

ConSURF prediction

- Highly conserved and buried domain
- Significant substitution
- Disrupt domain structure

- Ca2+ binding domain
- Substitution of + for - charged residue
- Disrupt Ca2+ binding

- Highly conserved domain
- Substitution of larger Phe residue at 2635 may interfere with Glu at 2706
- Disrupt domain structure

Family A - Pejvakin 762 C>T (R136X)

Hereditary Research Laboratory

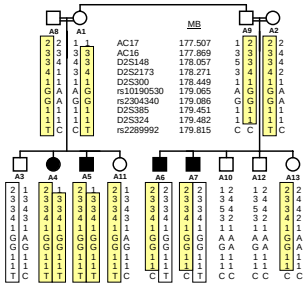

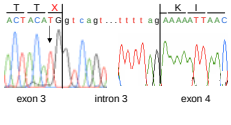

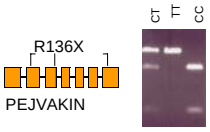

HpyCH4III digest

Palestinian Family AN

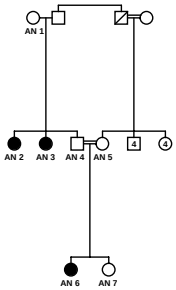

Homozygosity of AN 2, 3, 6

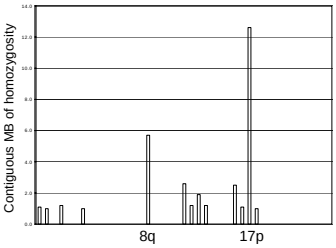

Microsatellite markers from homozygous region of 17p

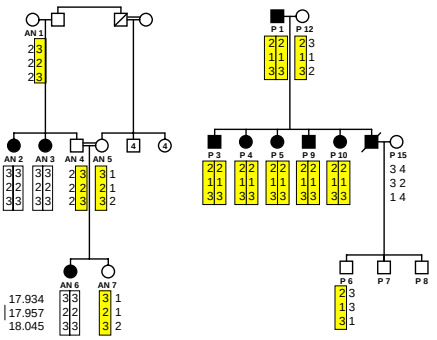

MYO15A sequencing in progress

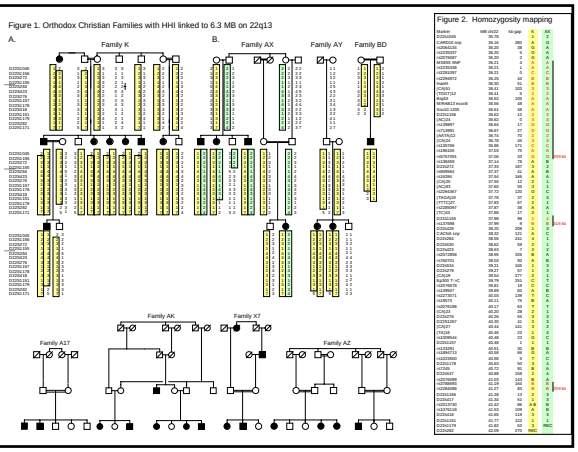

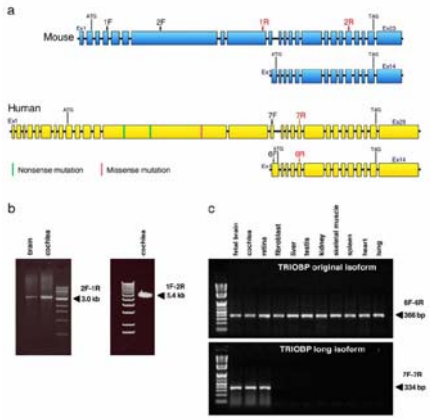

Mutations in TRIOBP in 9 Palestinian families

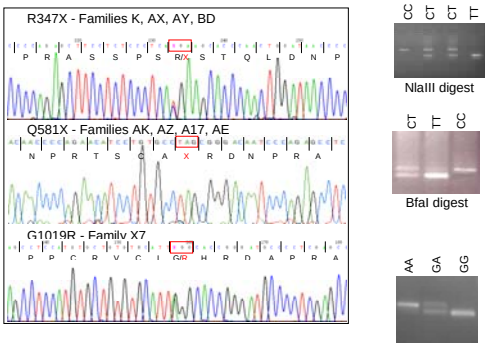

TRIOBP **(TRIO and F-actin Binding Protein)**

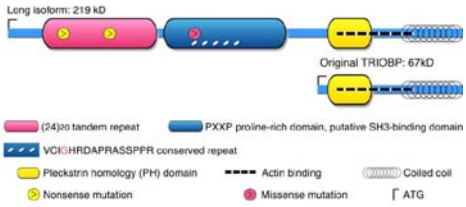

- **Filamentous actin (F-actin) binding protein**
- **Associates with the TRIO guanine nucleotide exchange factor**
- **Regulates actin cytoskeleton organization**

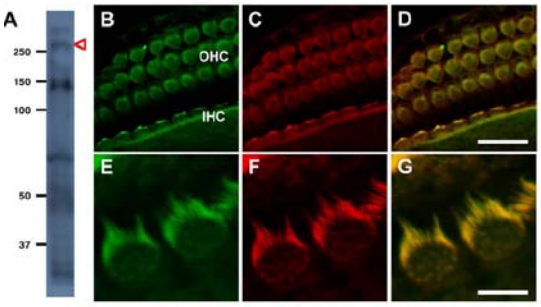

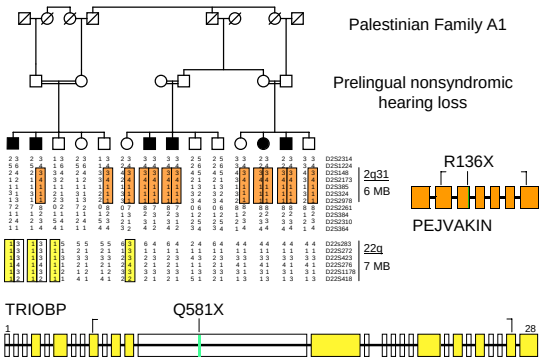

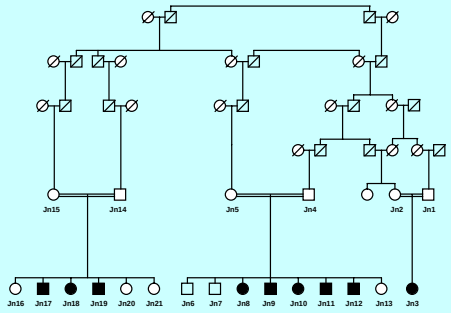

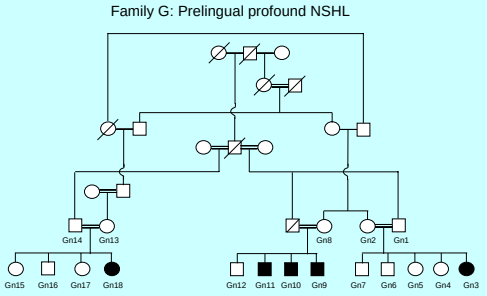

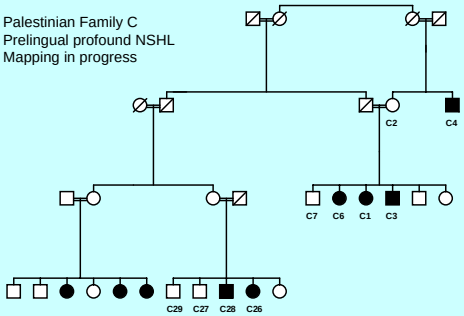

Conclusions

Hereditary Research Laboratory

- Inherited hearing loss in the Palestinian population is highly heterogeneous, both in the number of genes involved and in the number of alleles at each gene.
- Alleles responsible for hearing loss in this population are individually very rare.
- Families with hearing loss who are wildtype for *GJB2* are likely to harbor novel alleles, either of known hearing related genes (as in these three families) or of previously unknown genes.
- We have identified and cloned a new gene (TRIOBP) that underlines hearing loss in nine Palestinian families.
- Studies of multiple Palestinian kindreds are in progress to identify and characterize yet unknown genes.

Genetics of Hearing Loss in Middle Eastern Families

Bethlehem

Hashem Shahin

Judeh Abu Sa'ed

Amal Abu Rayan

Wa el Salhab

Moien Kanaan

Tel Aviv

Tama Sobe

Zippora Brownstein

Moshe Frydman

Koret Hirschberg

Karen B. Avraham

Seattle

Tom Walsh

Vanessa Walsh

Lara Shamieh

Ming K. Lee

Mary-Claire King

Supported by NIH RO1 DC005641